7. CIRCUIT DIAGRMA

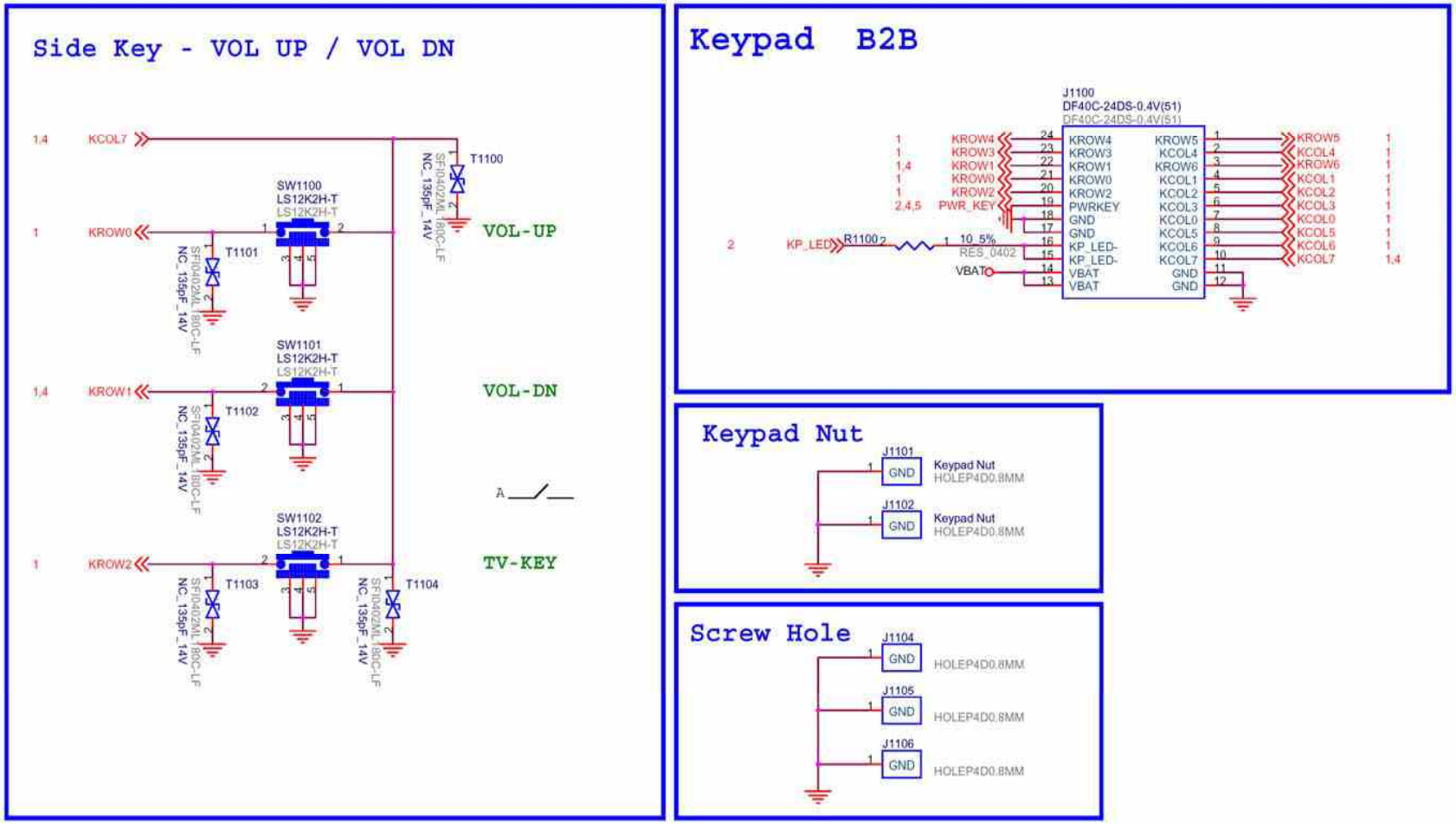

LGE Internal Use Only

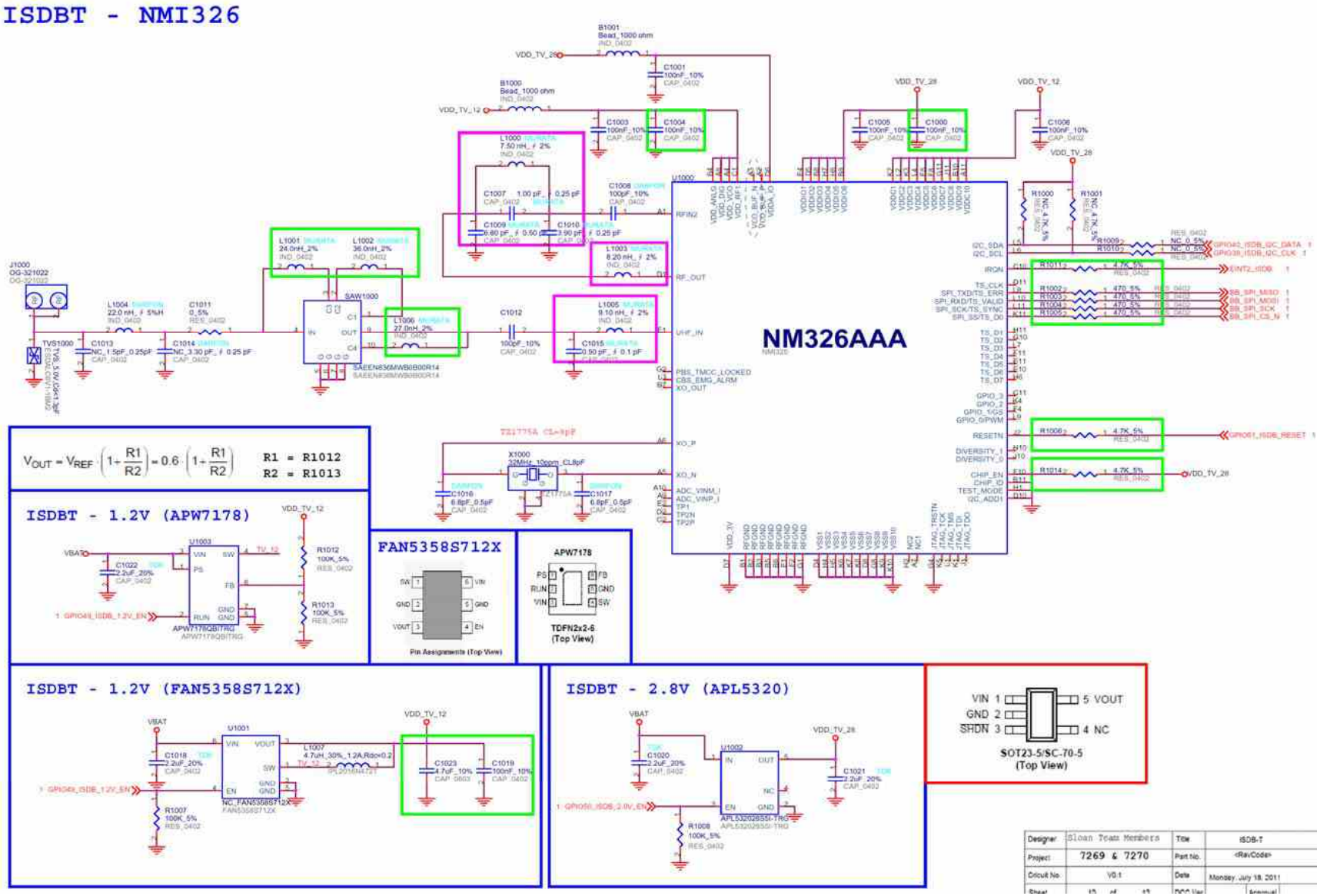

LGE Internal Use Only

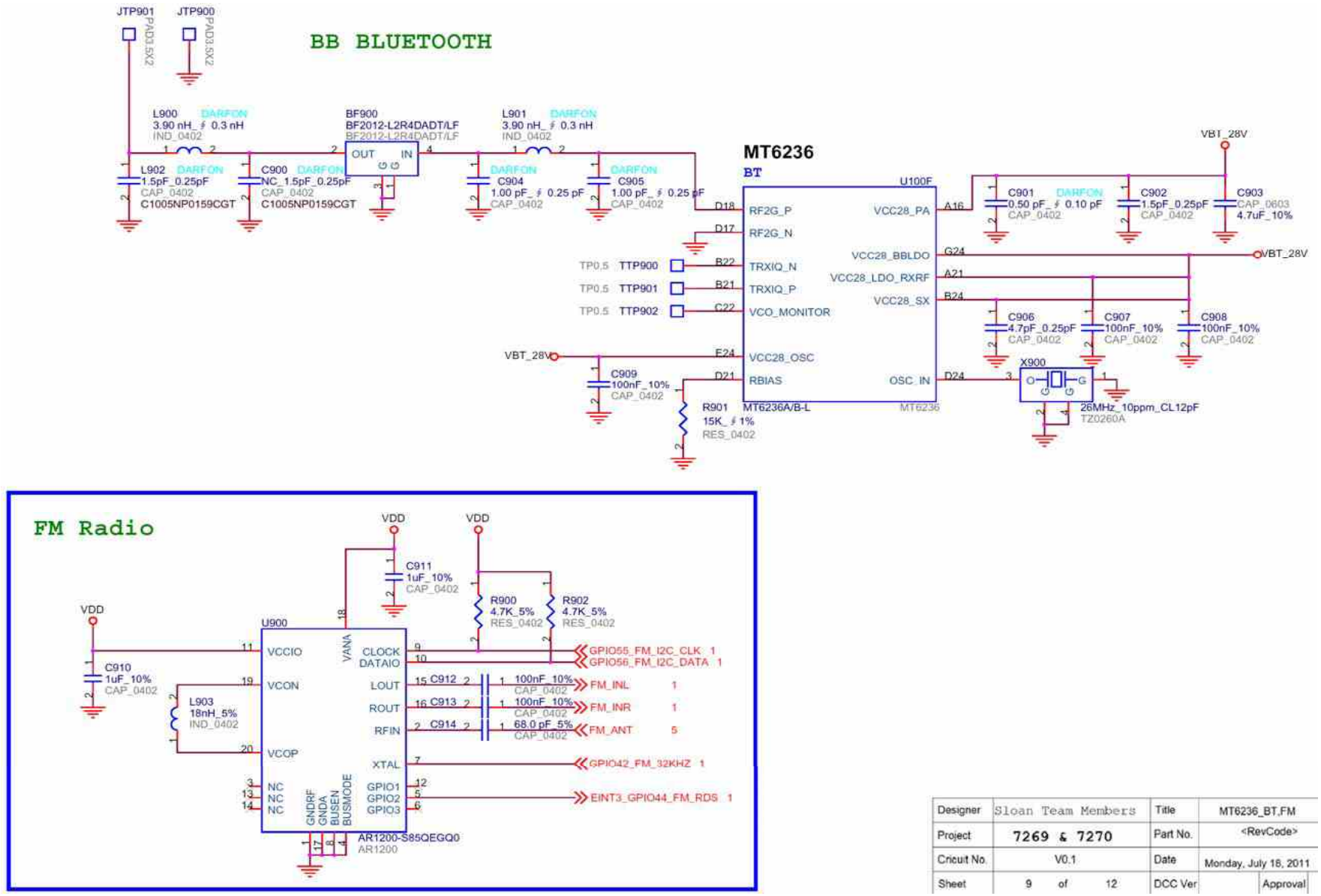

Designer	Sloan Team Members	Title	MT6236_BT,FM
Project	7269 & 7270	Part No.	<RevCode>
Cricuit No.	V0.1	Date	Monday, July 18, 2011
Sheet	9 of 12	DCC Ver	Approval

LGE Internal Use Only

RF FEM

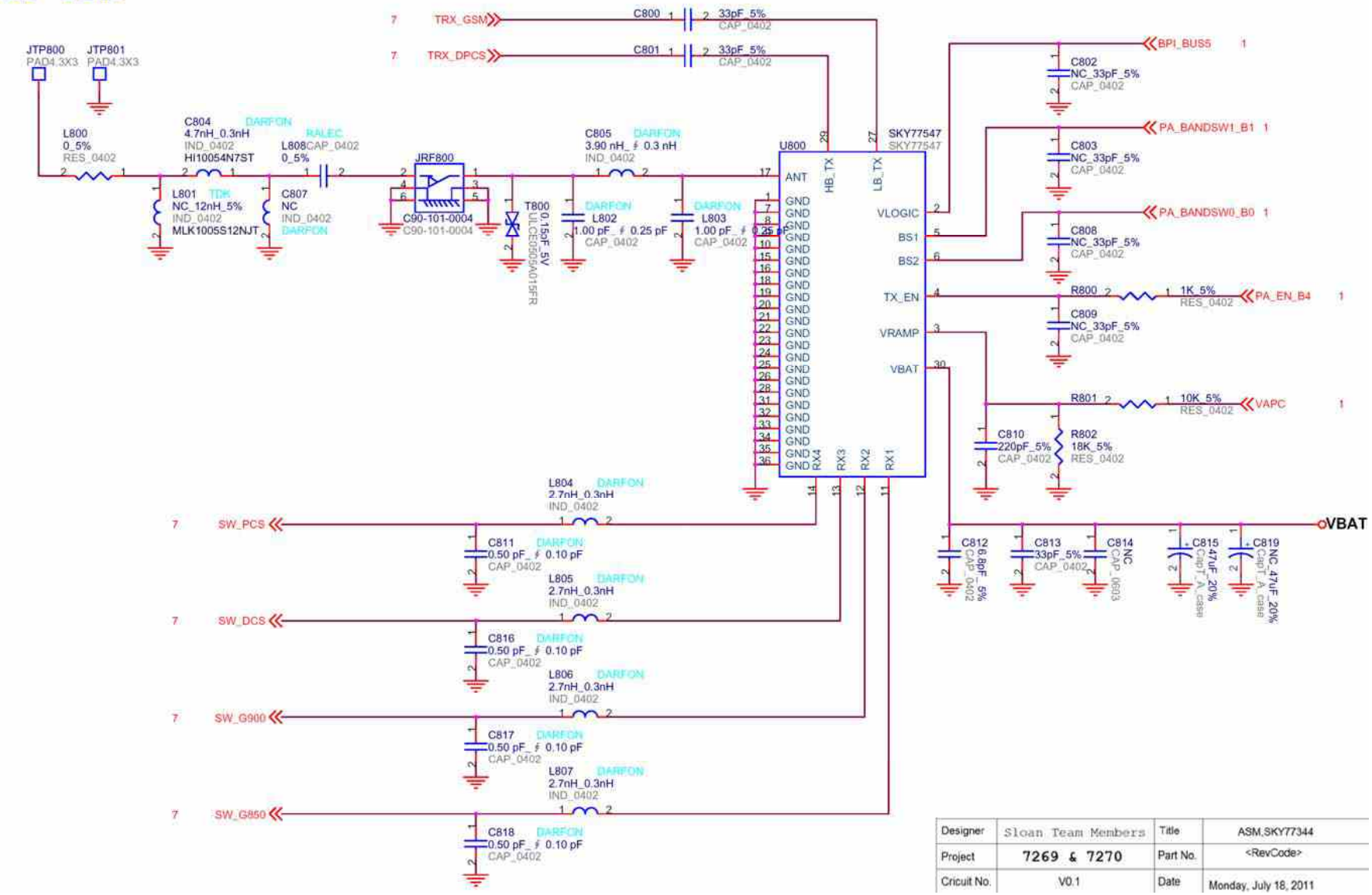

LGE Internal Use Only

TRX - AD6548/9

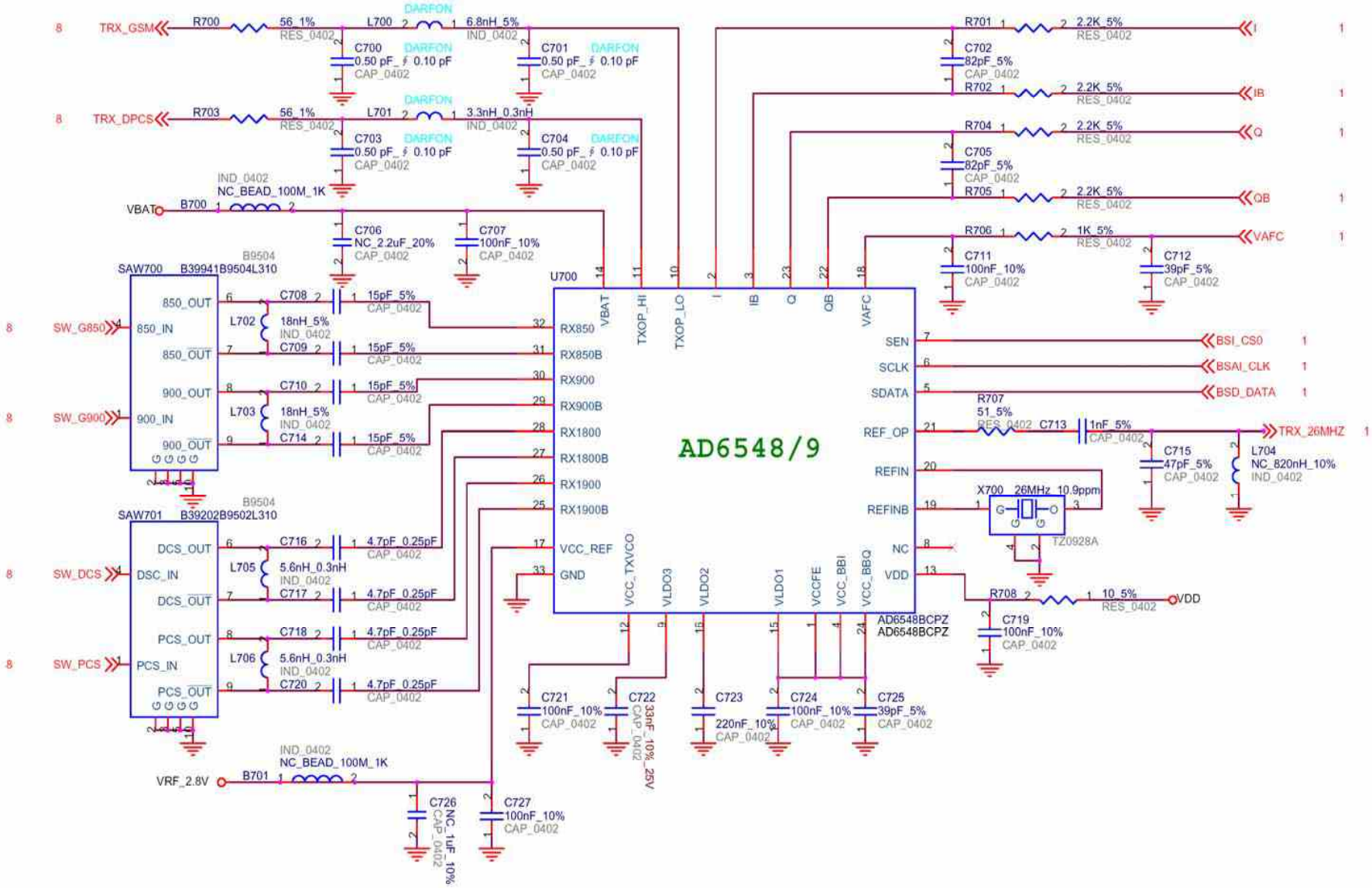

LGE Internal Use Only

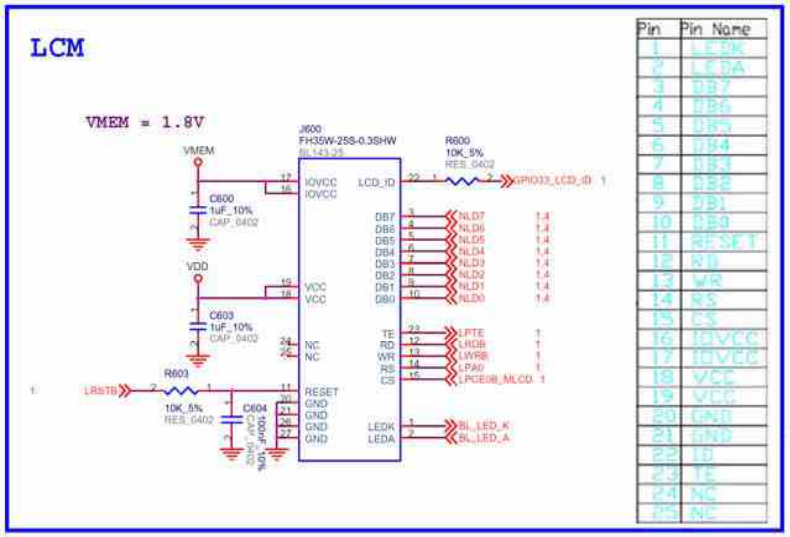

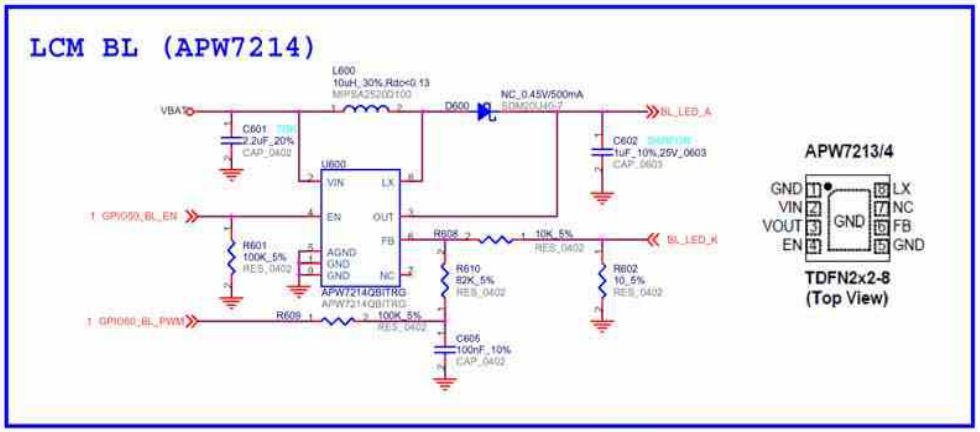

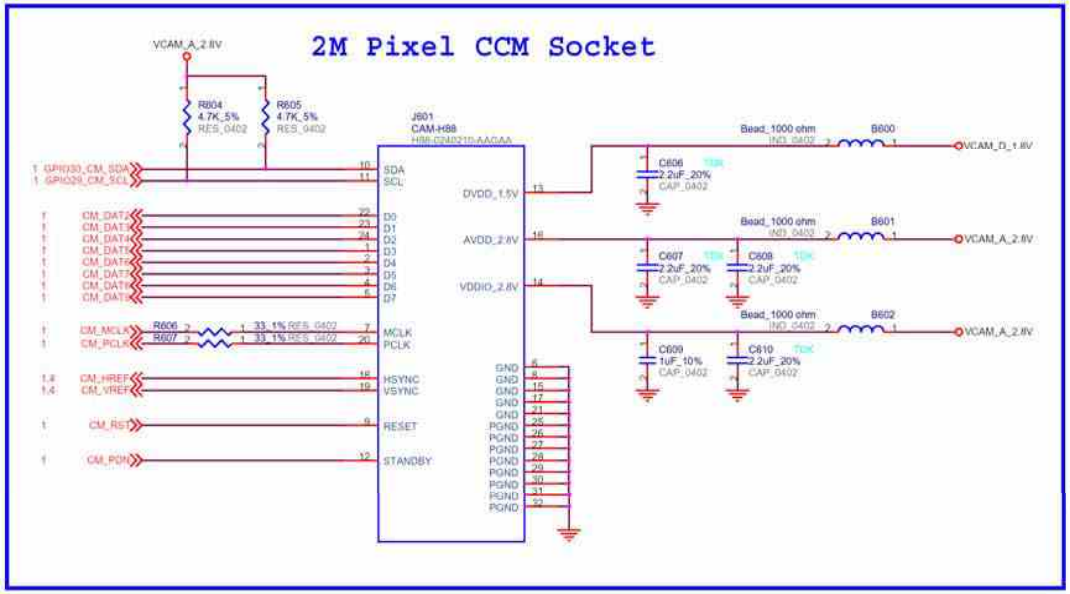

Camera Module Connector Pin Description

No.	SYMBOL	DESCRIPTION	No.	SYMBOL	DESCRIPTION
1	Data3	Pixel data output 3	13	VDDD	Digital Power(1.5V)
2	Data4	Pixel data output 4	14	VDDIO	I/O Power (1.8V or 2.8V)
3	Data5	Pixel data output 5	15	GND	Ground
4	Data6	Pixel data output 6	16	VDDA	Analog Power(2.8V)
5	Data7	Pixel data output 7	17	GND	Ground
6	GND	Ground	18	HSYNC	Horizontal Sync Output
7	MCLK	System Main clock	19	VSYNC	Vertical Sync output
8	GND	Ground	20	PCLK	Pixel clock output
9	RESET	Sensor Reset (Active "L")	21	GND	Ground
10	SDA	I2C standard data I/O port	22	Data0	Parallel pixel data0
11	SCL	I2C standard clock input	23	Data1	Parallel pixel data1
12	STANDBY	Sensor sleep mode. (Active"L")	24	Data2	Parallel pixel data2

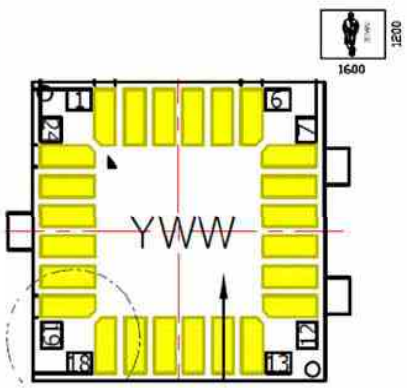

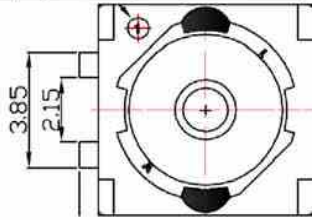

LGE Internal Use Only

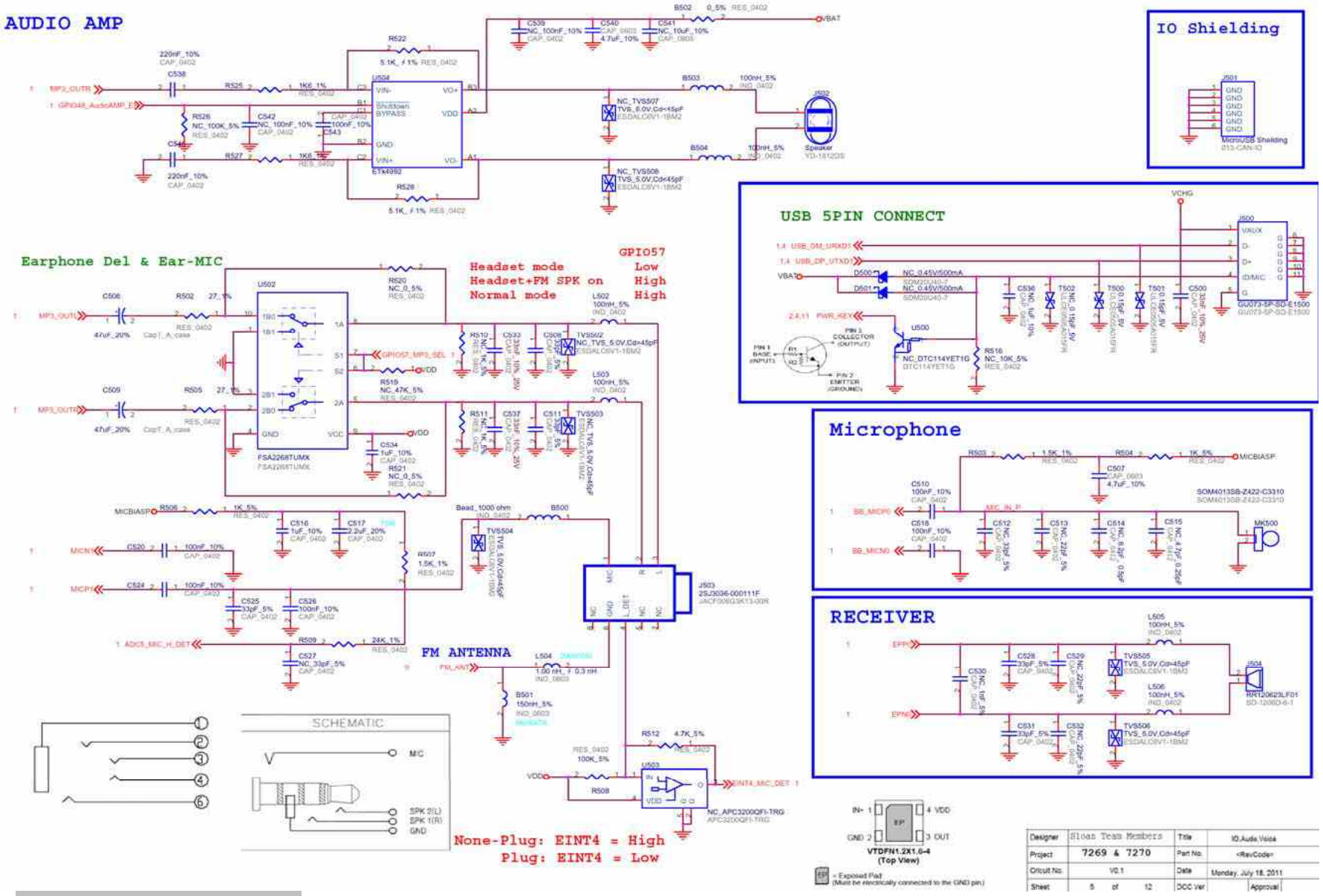

LGE Internal Use Only

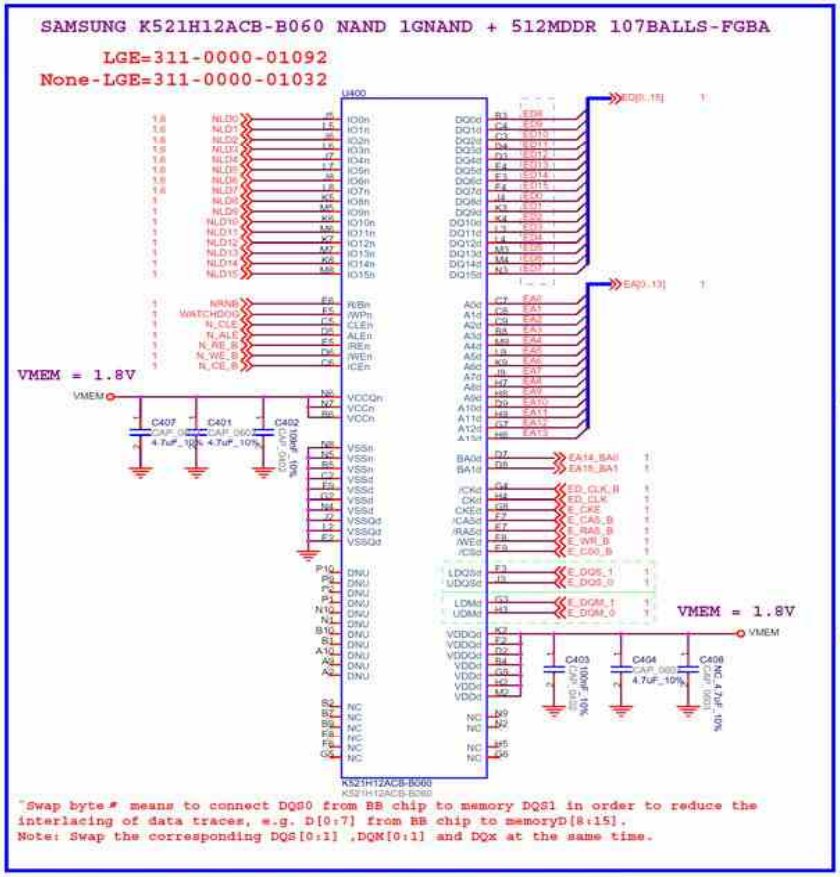

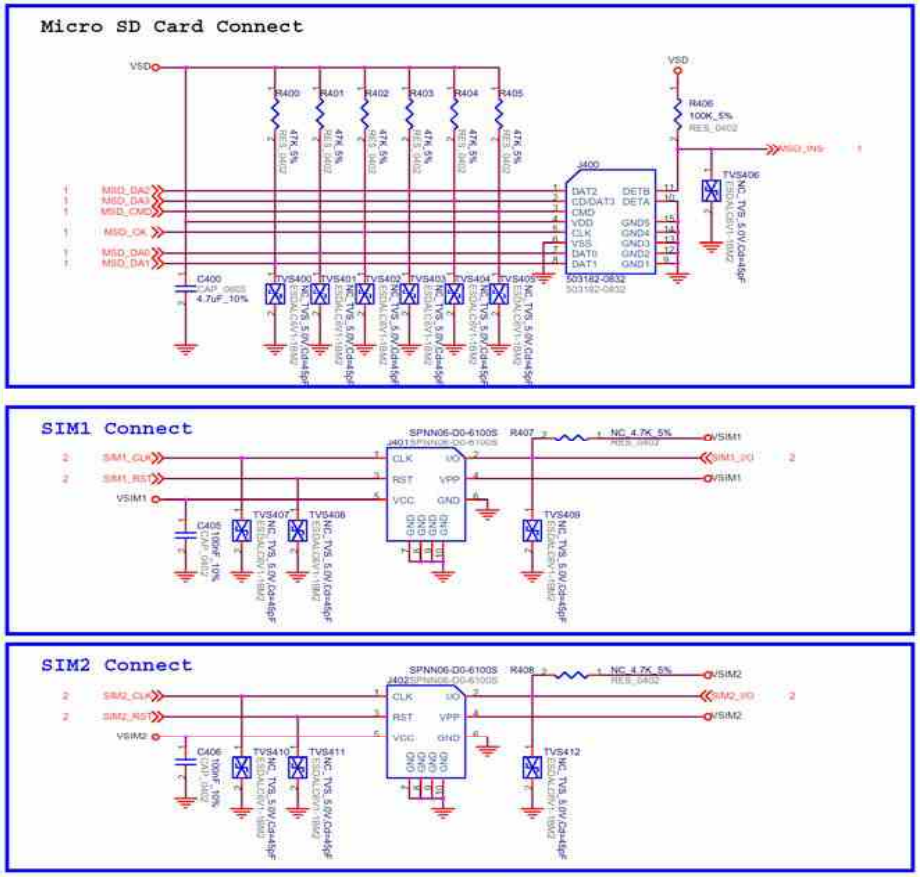

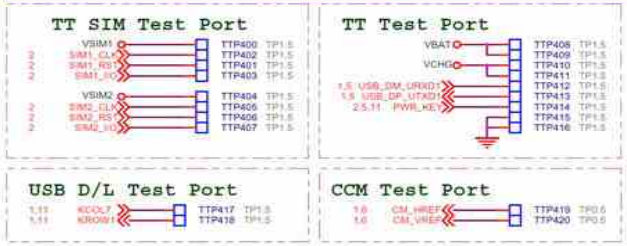

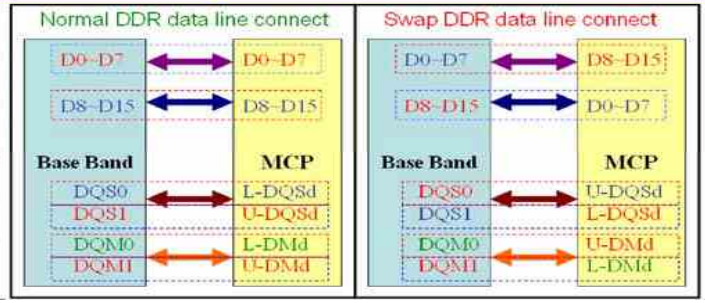

Designer	Sloan Team Members	Title	N/CP / SQ / SIM / TF
Project	7269 & 7270	Part No.	<RevCode>
Circuit No.	V0.1	Date	Monday, July 18, 2011
Sheet	4 of 12	DCC Ver	Approval

LGE Internal Use Only

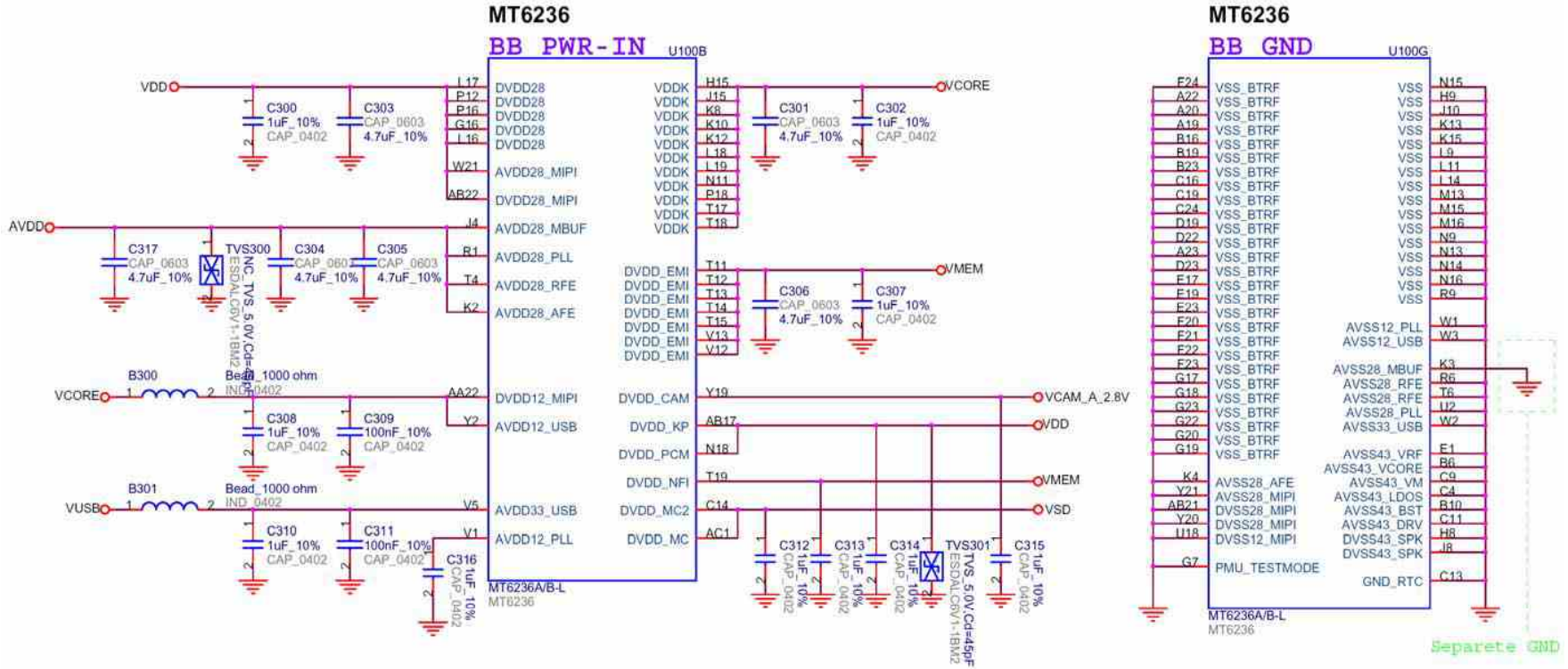

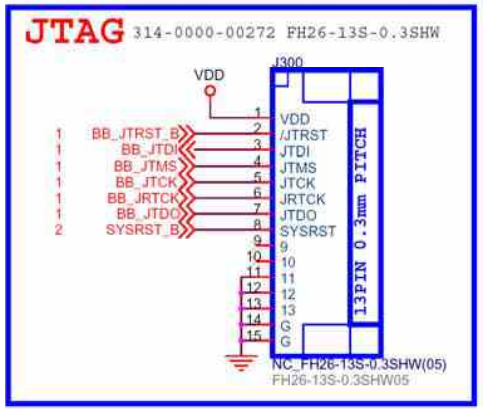

Designer	Sloan Team Members	Title	MT6236 PWR
Project	7269 & 7270	Part No.	<RevCode>
Cricuit No.	V0.1	Date	Monday, July 18, 2011
Sheet	3 of 12	DCC Ver	Approval

LGE Internal Use Only

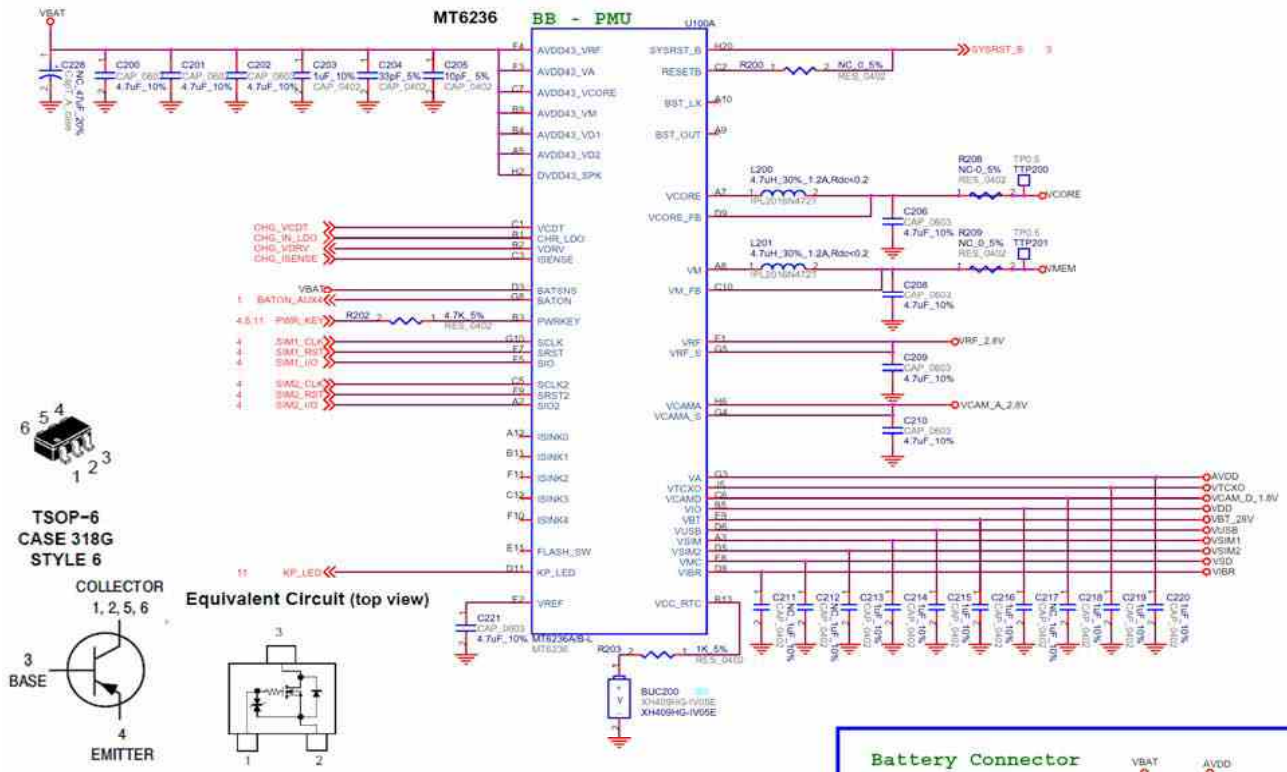

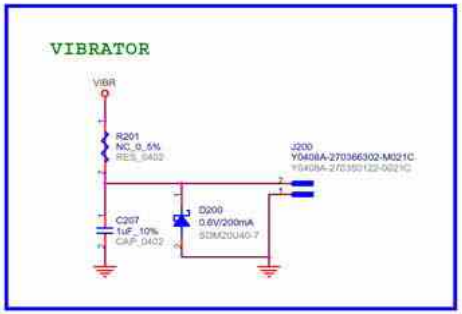

MT6236 PMU		
Power	Voltage(V)	Current(mA)
VRF	2.8	250
VCORE	0.8~1.3	350
VMEM	1.8	300
VDD	2.8	100
AVDD	2.8	125
VTCXO	2.8	40
VRTC	2.8	
VSIM1	1.8/3	100
VSIM2	2.8/3	100
VUSB	3.3	100
VBT	1.3/1.5/1.8/2.5/2.8/3/3.1/3.3	100
VCAMA	1.5/1.8/2.5/2.8	250
VCAMD	1.3/1.5/1.8/2.5/2.8/3/3.3	100

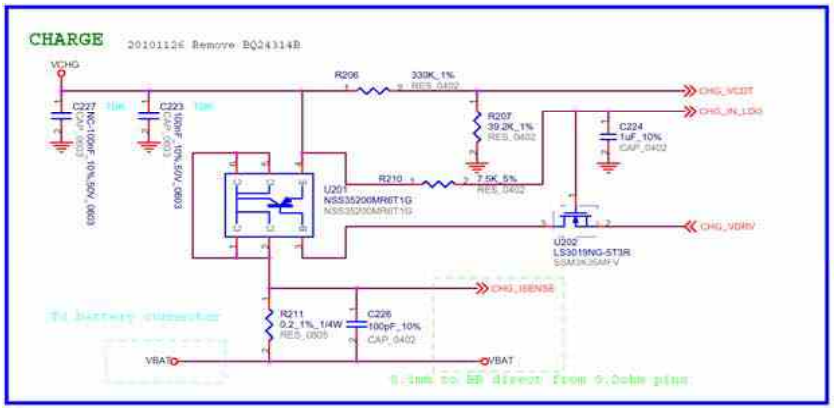

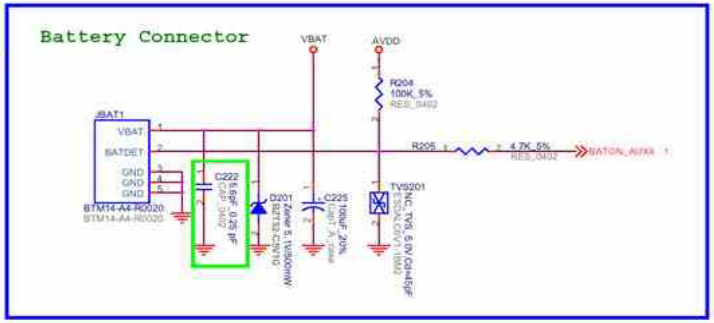

Designer	Sloan Team Members	Title	MT6236 PMU,CHG,VIB
Project	7269 & 7270	Part No.	<RevCode>
Circuit No.	V0.1	Date	Monday, July 18, 2011
Sheet	2 of 12	DCC Ver	Approval

LGE Internal Use Only

Pin name	Pin out	Normal mode	Test mode	Enable security	Burn EFUSE
TESTMODE	A11	L	VDD	L	L
XBOOT	H14	L	L	L	L
SECU_EN	A15	L	L	VDD	L
FSOURCE	U7	L	L	L	VBAT
VCCQ		VDD	VDD	VDD	VBAT

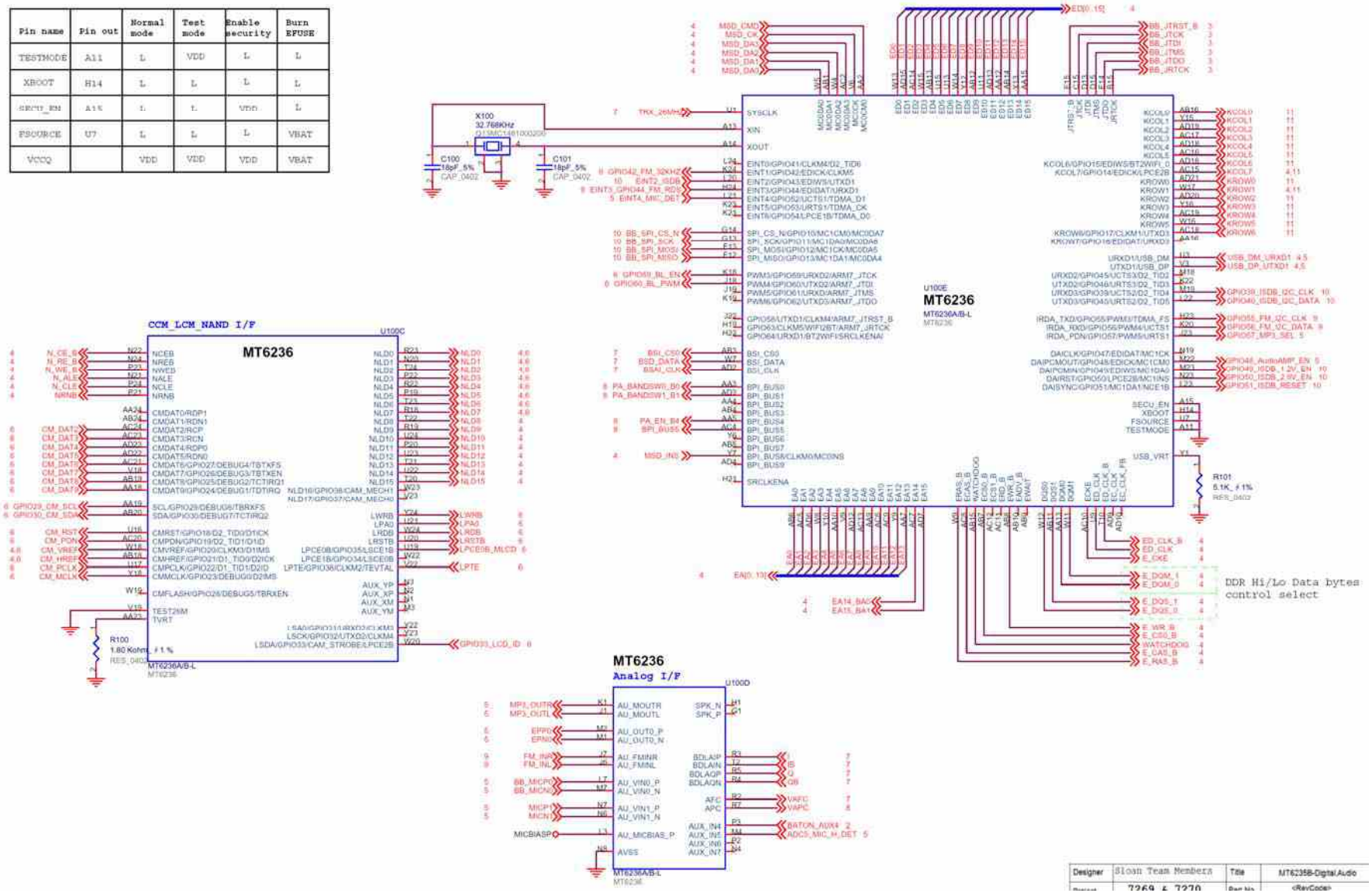

LGE Internal Use Only

8. BGA IC PIN Check

8.1 BGA PIN Check of main chip (MT6236)

BB_MT6236 (U100)

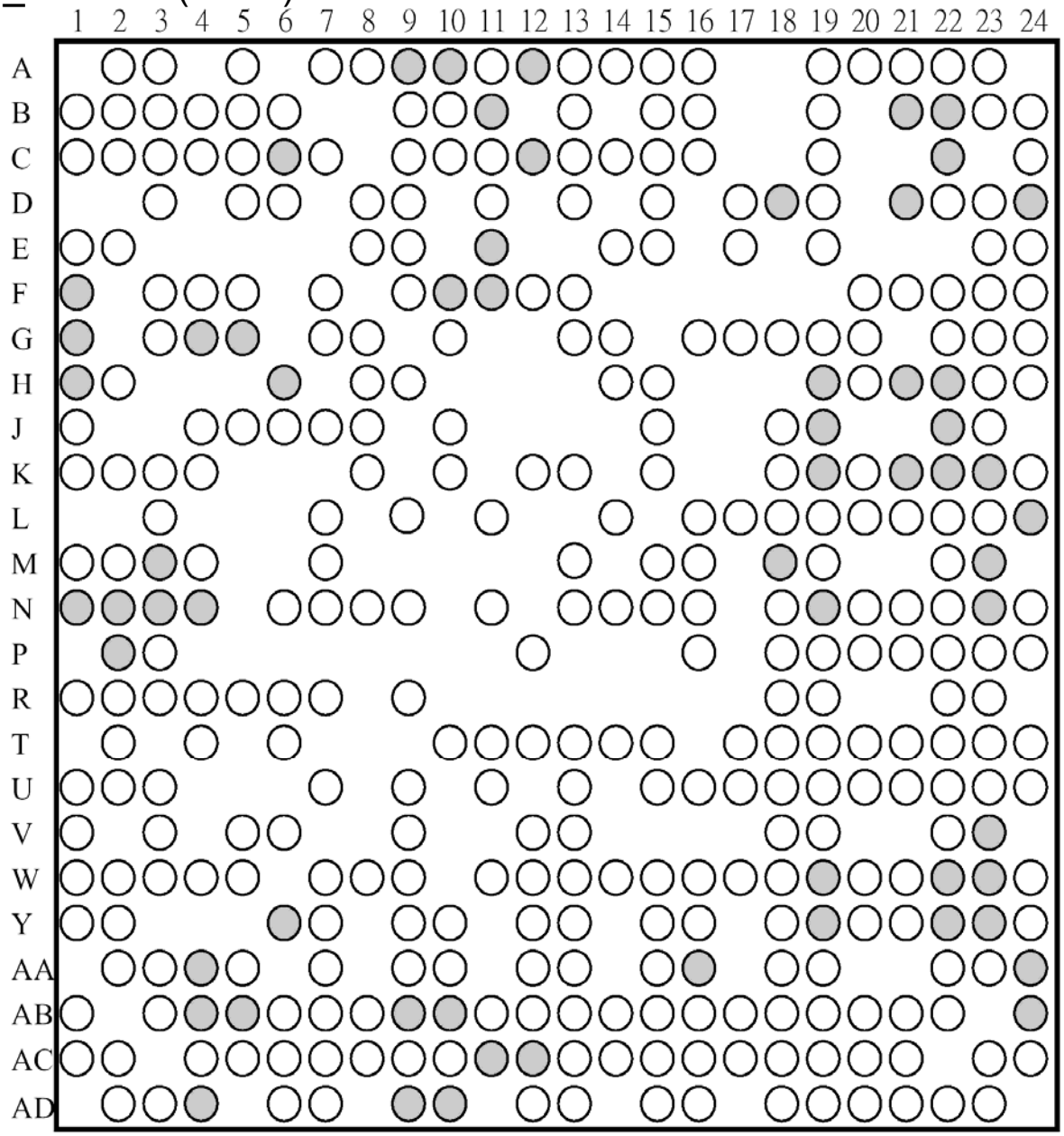

○ BGA use

● BGA non-use

8.2 BGA PIN Check of Memory (K521H12ACB-B060)

K521H12ACB-B060 (U400)

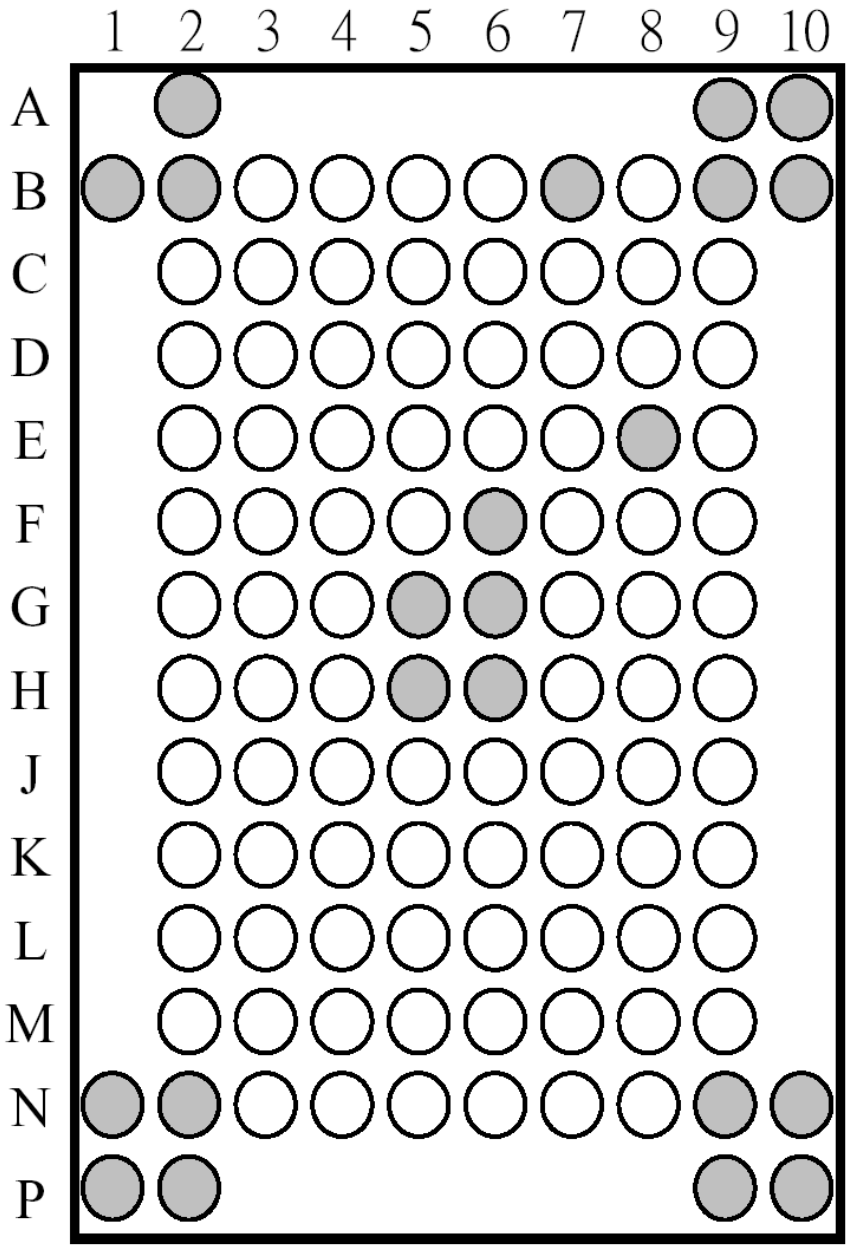

BGA use

BGA non-use

8.3 BGA PIN Check of TV module (NM326AAA)

NM326AAA (U1000)

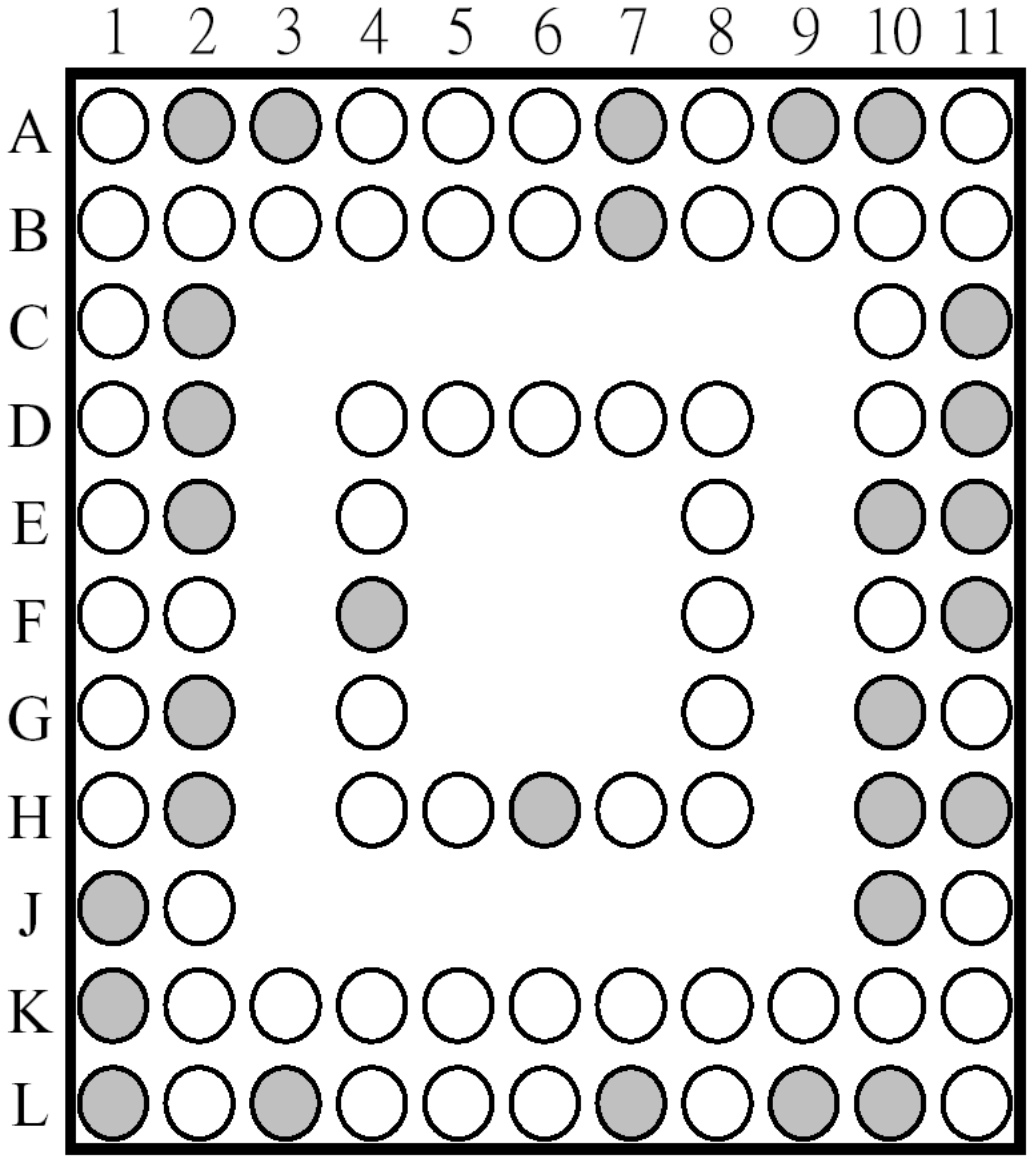

BGA use

BGA non-use